Mattson Mini Modular

Assembled board DIY Panel Wiring: **AD1 QuAD /ASR Envelope**

Panel components required:

Component	Quantity/value/type	Function	Connect to:	Wire Kit type:
Wire kit:	WK-16A	Board to panel wiring	All-see below	
Pots:	8xA1M	Channel 1 Attack	CF3B	3C
		Channel 2 Attack	CF3A	3C
		Channel 3 Attack	CF4C	3C
		Channel 4 Attack	CF4D	3C
		Channel 1 Decay	CF2D	3C
		Channel 2 Decay	CF2C	3C
		Channel 3 Decay	CF5A	3C
		Channel 4 Decay	CF5B	3C
Switches:	None			
Jacks:	4xNormal	Channel 1 out	CF2B	2C
		Channel 2 out	CF2A	2C
		Channel 3 out	CF5C	2C
		Channel 4 out	CF5D	2C
	4xSwitched	Channel 1 Gate in	CF3D	3C
		Channel 2 Gate in	CF3C	3C
		Channel 3 Gate in	CF4A	3C
		Channel 4 Gate in	CF4B	3C
LED's	None			

Wire kit description WK-16A

Qty	Cable	Connector description	Wires	
4	2C	3-pin MTA 0.100" socket	8" 24 AWG Red	Pin 1
			No wire	Pin 2
			8" 24 AWG Black	Pin 3
12	3C	3-pin MTA 0.100" socket	8" 24 AWG Red	Pin 1
			8" 24 AWG White	Pin 2
			8" 24 AWG Black	Pin 3

PC Board connector conventions

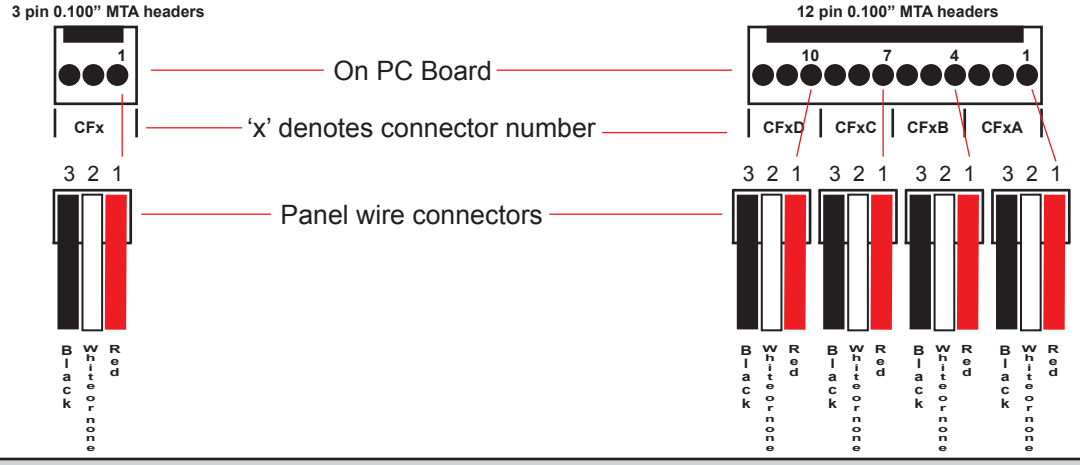

06/2010